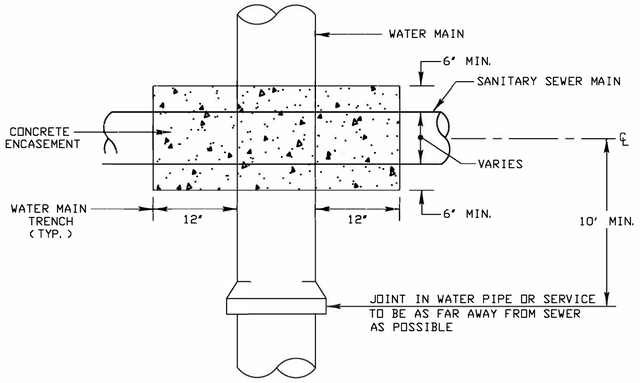

PLAN
NOT TO SCALE

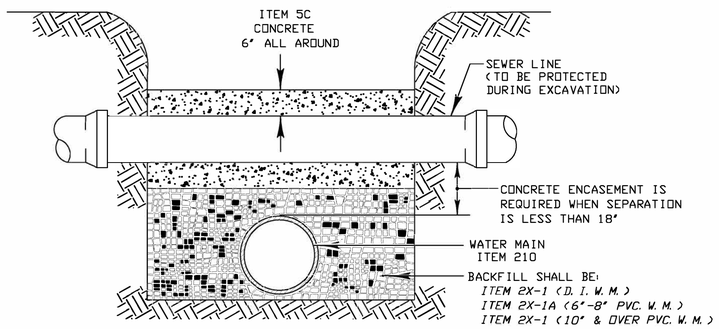

NOTE: CROSSING IS TYPICAL. OTHER TYPES OF WATER/SANITARY SEWER MAIN CROSSINGS SHALL BE TREATED IN A SIMILAR MANNER, A. O. B. E.

SECTION
NOT TO SCALE

WATER LINE SANITARY SEWER MAIN CROSSING
CONCRETE ENCASEMENT

WATER LINE BELOW SEWER

NOTES:

1. WHERE A WATER MAIN AND SANITARY SEWER MAIN ARE PARALLEL TO EACH OTHER, THEY MUST BE SEPARATED EITHER BY 5' HORIZONTALLY, OR BY 18" IN ELEVATION.
2. WHEN A WATER LINE AND A SANITARY SEWER MAIN ARE TO CROSS, AT LEAST 18" OF VERTICAL SEPARATION SHALL BE PROVIDED BETWEEN THE EXTERIORS OF THE TWO LINES. ONE FULL LENGTH OF WATER PIPE SHALL BE CENTERED OVER THE SEWER SO THAT JOINTS IN THE WATER MAIN WILL BE AS FAR AWAY FROM THE SEWER AS POSSIBLE. WHEN 18" OF VERTICAL SEPARATION CANNOT BE MAINTAINED, THE SEWER LINE SHALL BE ENCASED IN CONCRETE 6" THICK, ALL AROUND.
3. CONTRACTOR SHALL ADHERE TO ALL PROVISIONS FOR WATER MAIN AND SEWER MAIN CONSTRUCTION AS OUTLINED IN THE ***10 STATE STANDARDS MANUAL OF CONSTRUCTION***

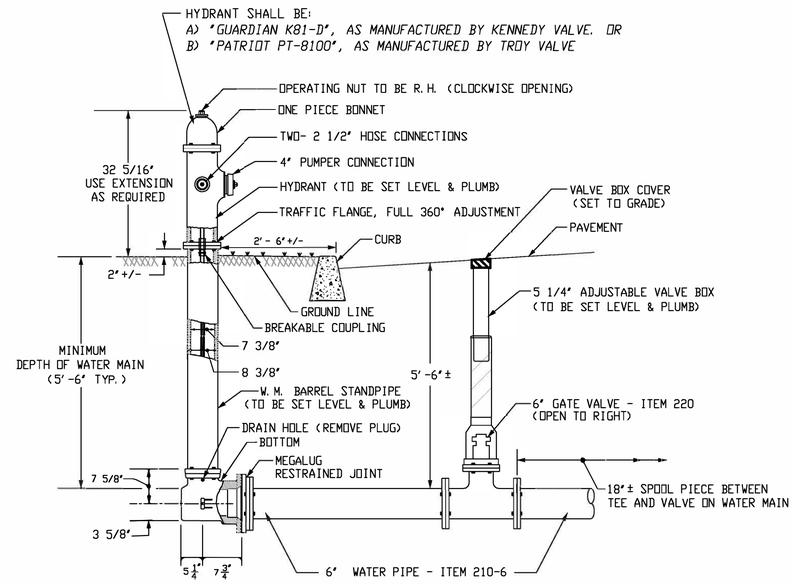

NOTE:

CONTRACTOR IS RESPONSIBLE FOR CONNECTING ALL HYDRANTS, EXISTING OR NEW, TO FUNCTIONAL WATER MAIN. COST OF ALL FITTINGS AND LABOR IS TO BE INCLUDED IN THE UNIT BID PRICE FOR WATER MAIN - ITEM 210.

TYPICAL HYDRANT DETAIL - ITEM 230

NOT TO SCALE

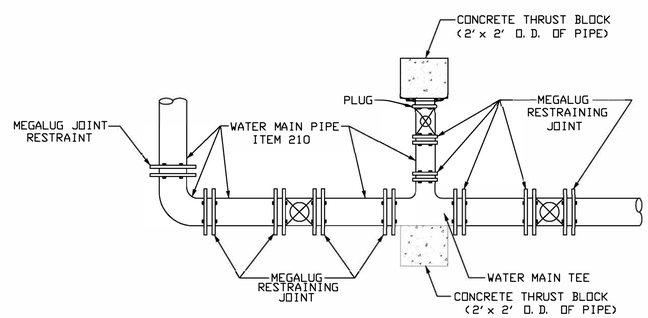

TYPICAL DETAIL OF THRUST BLOCKS FOR WATER MAINS
-AND-
TYPICAL DETAIL FOR RESTRAINING VALVES

NOT TO SCALE

GENERAL WATER NOTES

1. WATER MAINS SHALL BE INSTALLED WITH A MINIMUM BURY OF 5'-6".
2. CONCRETE THRUST BLOCKS SHALL BE PLACED AT ALL PLUGS AND TAPPING VALVES/SLEEVES OR RESTRAINED JOINTS.
3. CONCRETE THRUST BLOCKS SHALL NOT COVER NUTS AND BOLTS ON FITTINGS.
4. ALL DUCTILE IRON WATER MAINS AND FITTINGS SHALL BE CEMENT LINED.
5. ANY EXISTING HYDRANTS, VALVES OR FITTINGS REMOVED DURING CONSTRUCTION AND NOT REUSED SHALL BE DELIVERED TO THE CITY WATER DEPARTMENT A. O. B. E.

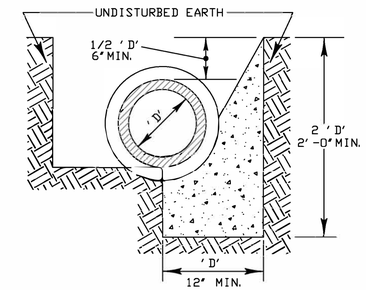

ELEVATION

BLOCKING AT HORIZONTAL BENDS AND TEES

NOT TO SCALE

PIPE DIAMETER	TAPPING VALVE	PLUG
24"	35	15
12"	14	4
8"	6	2
6"	4	1. 5

REQUIRED AREA OF THRUST BLOCKS

(SQ. FT.)

NOTES:

1. ALL THRUST BLOCKING, INCLUDING EXCAVATION AND CONCRETE WORK, TO BE PAID FOR UNDER ITEM 210 (WATER MAIN).
2. CONCRETE FOR THRUST BLOCKING SHALL NOT COVER NUTS AND BOLTS ON FITTINGS.
3. THRUST BLOCKS SHALL CONSIST OF 3000 P. S. I. CONCRETE, BEFORE ANY HYDRAULIC FORCES ARE APPLIED TO THE BLOCKING. CONCRETE SHALL BE CURED A MINIMUM OF 5 DAYS. IN THE EVENT THAT THE 5 DAY CURING TIME IS NOT FEASIBLE, TIE RODS SHALL BE USED IN CONJUNCTION WITH THRUST BLOCKING, A. O. B. E.

DATE	REVISION
8/05	Changed Hyd. Model No. (Kennedy)
1/04	DRAIN PLUG ON HYD.

WATER MAIN & HYDRANT

STANDARD DETAILS

DESIGNED:	C.O.B.
DRAWN:	W.A.R.
CHECKED:	D.J.F.
DATE:	MARCH 2004
SCALE:	NOTED
SHEET:	? OF ?

SEAL OF THE CITY OF BINGHAMTON N.Y.

DEPARTMENT OF ENGINEERING

DRAWING NO. 2015

File name: K:\Standard Details Layout\dwg\ACAD-2012 Autocad version.dwg Tab Name: Water Main & Hydrant Apr 16, 2015-12:23pm jelinsky